Dimension of unidirectional bevel gear mechanism 8x S.245.001.1~3

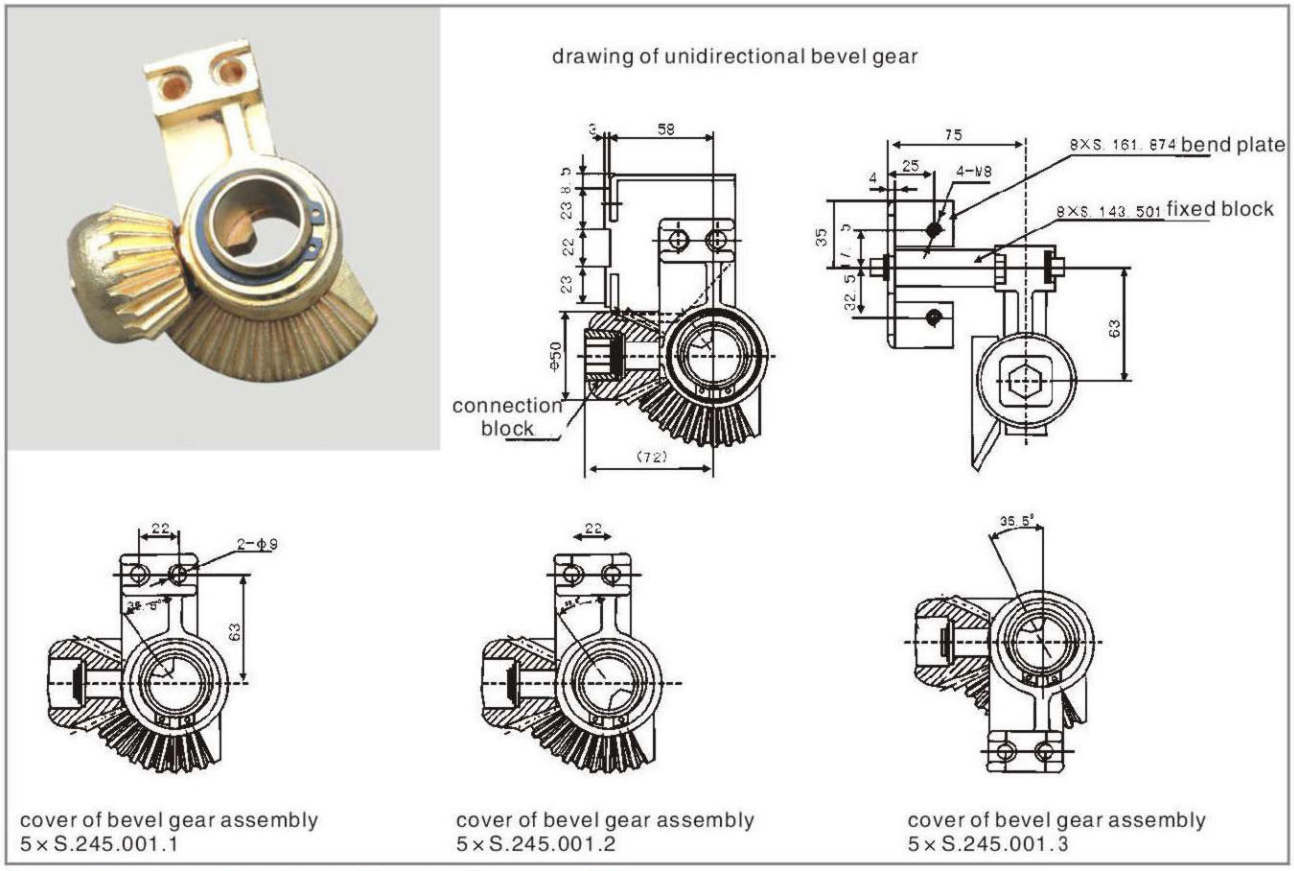

Accessories of connecting rod assembly

5x S.233.030.1, L=60mm 5x S.233.030.3, L=80mm

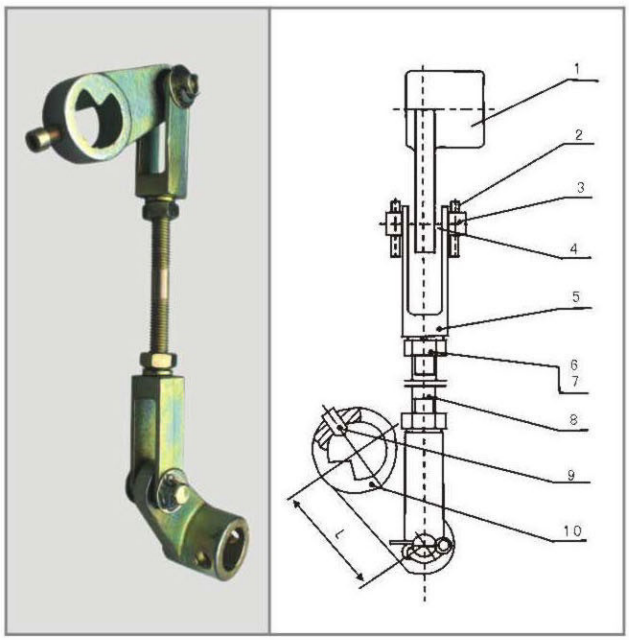

Item No.	Name	code	quantity	L
1	crank arm	5*S.151.016.1	1	
2	split pin	GB91-86	4	
3	pin with holes	GB880-86	2	
4	washer	8×S.950.010	4	
5	bracket	8×S.257.010	2	
6	M12 nut M12	GB170-86	2	
7	12 washer 12	GB93-87	2	
8	double-screw bolt	GB901-88	1	
9	screw	GB78-85	1	
10	crank arm	5×S.233.030.1 connecting rod adopted 5×S.151.017	1	60
		5×S.233.030.3 connecting rod adopted 5×S.151.017.1	1	80